Secabo base plate 38cm x 38cm for SMART

Overview

Transfer press base plate with a working surface 38cm x 38cm for use with the Secabo adapter for base plate and S.-W. Secabo TC5 SMART and TC7 SMART.The plate is intended as an additional base plate for e.g. a TC5 SMART transfer press with corresponding slide extension.The matching adapter is not included in the delivery and is optionally available: Art. No. 109.505.311

Technical Data

Hole spacing	90mm / 60mm
Compatible with adapter	Art. No. 109.505.311
weight without packaging	6 kg
weight with package	8,00 kg
Brand	Secabo
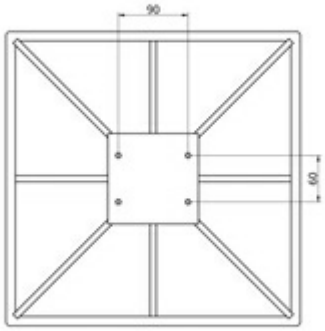
Views